PARTS LIST

2017.09.28

TABLE OF CONTENTS

AERO 26-21_31-21 PC top 1
Filter and motor 3
AERO container 30L inox 5
AERO 26,31 Accessories 7
Recommended spare parts 9

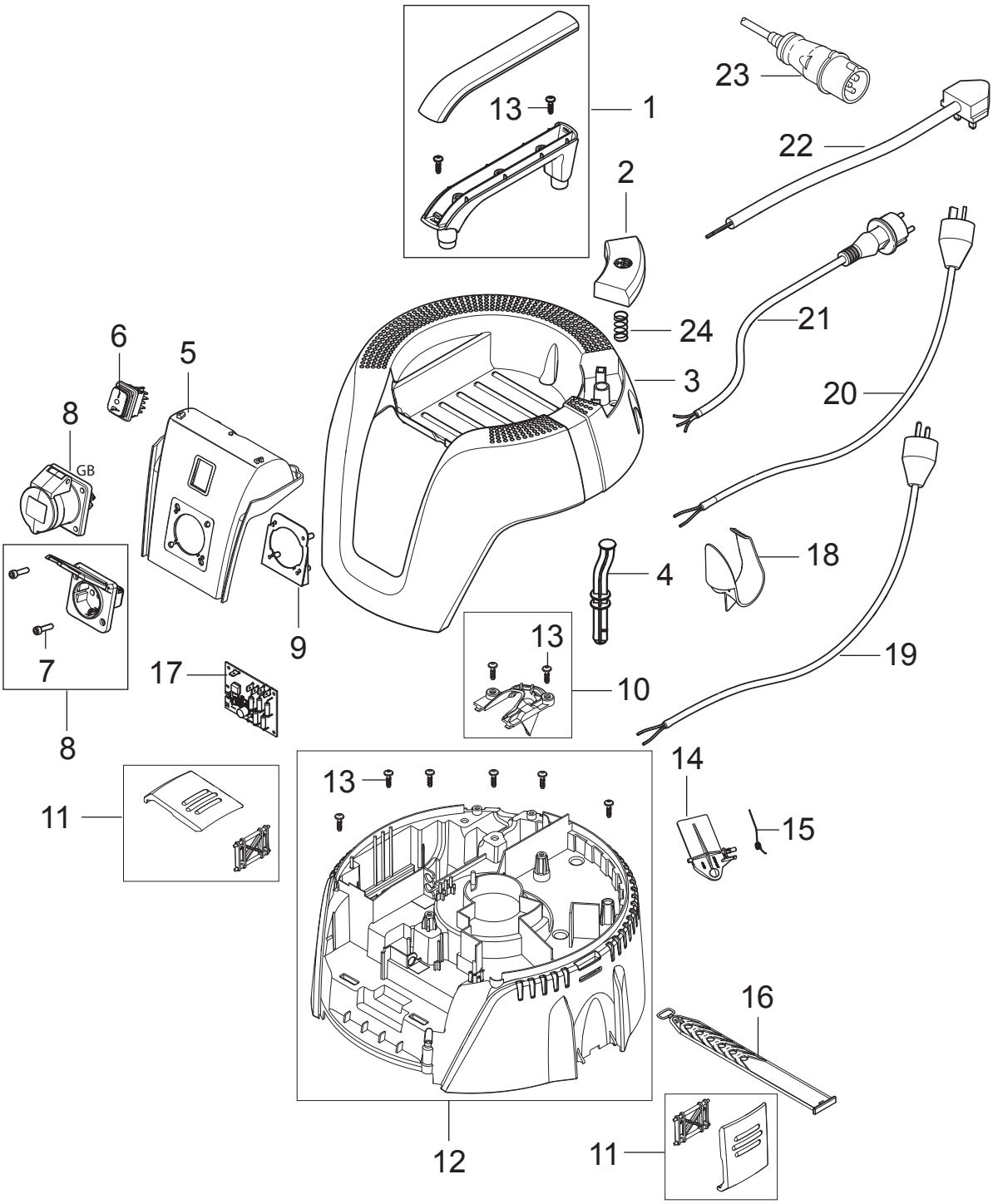
1
13
2
24
3
23
22
21
20
19
18
4
10
13
6
5
8
GB
9
7
8
17
11
13
12
14
15
16
11

No.	Part No.	Qty.	Description	Part Note
	107412600	1	BOX AERO 26 X10	[1]
1	107409137	1	HANDLE	
2	107409138	1	PC BUTTON	
3	107409145	1	AERO HEAD COVER 26-2L	
4	107409141	1	PC ROD	
5	107409191	1	INTERFACE SWITCH AND OUTLET ALTO BLUE	
6	107409135	1	SWITCH 1-0-TOOL	
7	302003705	1	SCREW EJOT DELTA PT35X18WN5451	
8	107400059	1	SOCKET 10A/250V CH	
8	302004036	1	SOCKET 16A/250V FR	
8	107402842	1	OUTLET 2P AND PE 16A 110V	
8	302001185	1	SOCKET 10A/250V AU	
8	302004034	1	SOCKET 16A/250V EU	
8	302004336	1	SOCKET 13A/250V GB	
8	302004338	1	SOCKET 15A/125V US/CSA	
9	302002052	1	PLUG SOCKET PLATE	
10	107409125	1	CABLE OUTLET	
11	107409130	2	CLAMP	
12	107409149	1	CLAMPING PLATE	
13	302003704	9	SCREW EJOT DELTA PT50X18WN1451	
14	107409129	1	PC FLAP - KIT	
15	909100083	1	TORSION SPRING D0.9X18X45 INOX	
16	107409131	1	RUBBER STRAP	
17	107409188	1	PCBA CHAMELEON 21 EA 230V	
17	107409189	1	PCBA CHAMELEON 21 EA 110V	
18	107409982	1	HOSE/CABLE HOOK. AERO 26/31	
19	61130	1	POWERCORD H05VV-F 3G1.5X5.7M C	[2]
20	302002391	1	POWERCORD H05VV-F 3G1.5X5.7M A	[3]
21	107409178	1	POWER CORD US	[4]
21	61132	1	POWERCORD HO5VV-F 3G1.0X5.7 SN	[5]
22	61129	1	POWER CORD H05VV-F3G1.5X5	[6]
23	302000692	1	POWER CORD H07BQ-F3G1.5X8.2 CE	[7]
24	107411345	1	SPRING FOR BUTTON	

Part Notes:

[1] - Contains 10 pcs
[2] - EU
[3] - AU, 220-240V/50-60HZ
[4] - US 120V 50/60Hz
[5] - CH
[6] - UK 230V 50Hz
[7] - UK 110V 50Hz

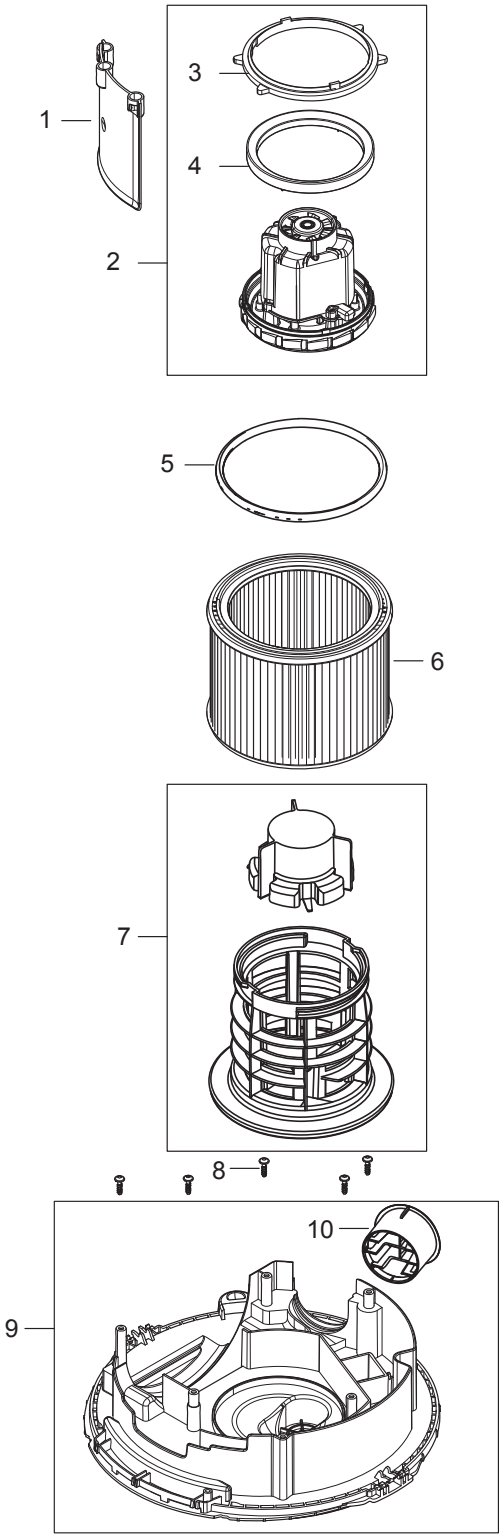
1
2
3
4
5
6
7
8
9
10

No.	Part No.	Qty.	Description	Part Note
1	107409159	1	DEFLECTOR SHIELD	
2	107410825	1	MOTOR KIT 1200W 230V/50-60HZ	[1]
2	107409160	1	MOTOR KIT 1000W 220-240V/50-60HZ	
2	107409162	1	MOTOR KIT 1000W 110-120V/50-60HZ	
2	107412971	1	MOTOR 1200W 100V 50/60HZ JP	[2]
3	107409163	1	UPPER MOTOR SEALING	
4	107409164	1	LOWER MNOTOR SEALING	
5	107409165	1	SEALING FILTER	
6	302000490	1	FILTER ELEMENT Ø185X140 PET M-CLASS	
7	107402646	1	FILTER SUPPORT CAGE ATTIX/AERO PP	
8	302003704	6	SCREW EJOT DELTA PT50X18WN1451	
9	107409166	1	BASEPLATE WITH OUTLET	
10	107409167	1	OUTLET	

Part Notes:

[1] - AERO 26-2L
[2] - JP 50/60Hz

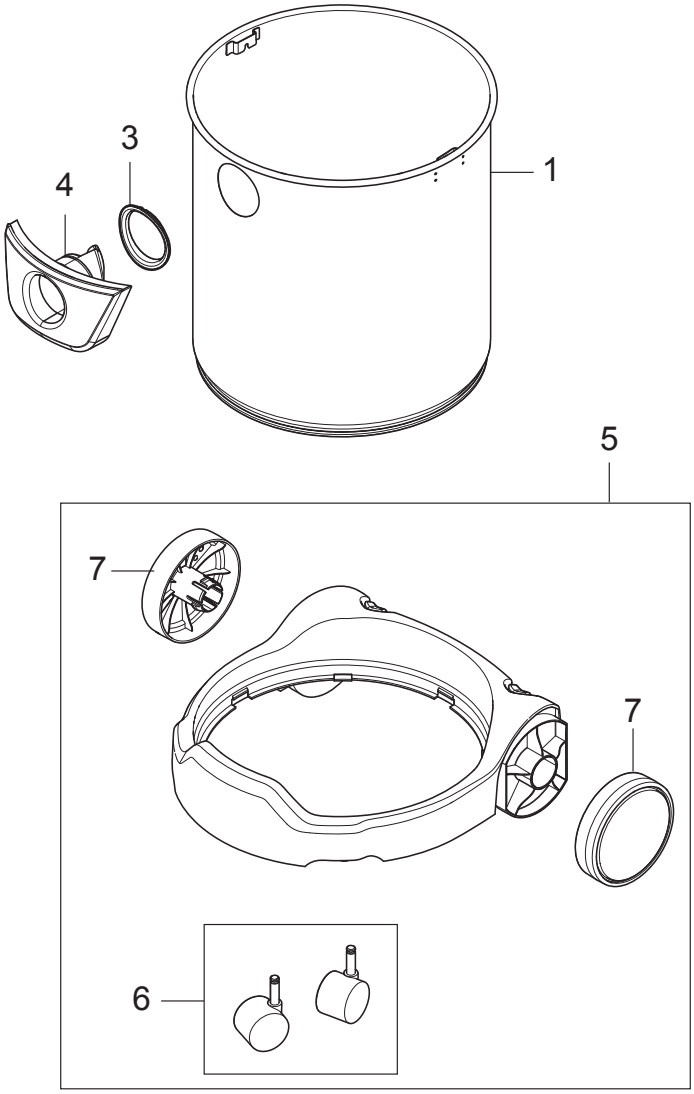
3
4
1
5
7
7
6

No.	Part No.	Qty.	Description	Part Note
1	107409176	1	CONTAINER 30L INOX	
3	107409173	1	INLET GASKET	
4	107409169	1	INLET FITTING	
5	107409174	1	TROLLEY CPL.	
6	140 6422 500	1	WHEELS LINK 50MM	
7	107409170	2	WHEEL D130	[1]

Part Notes:

[1] - TSB-LI-VAC-2015-002 AERO 21-26-31 wheel
DE TSB-LI-VAC-2015-002 AERO 21-26-31 Rad

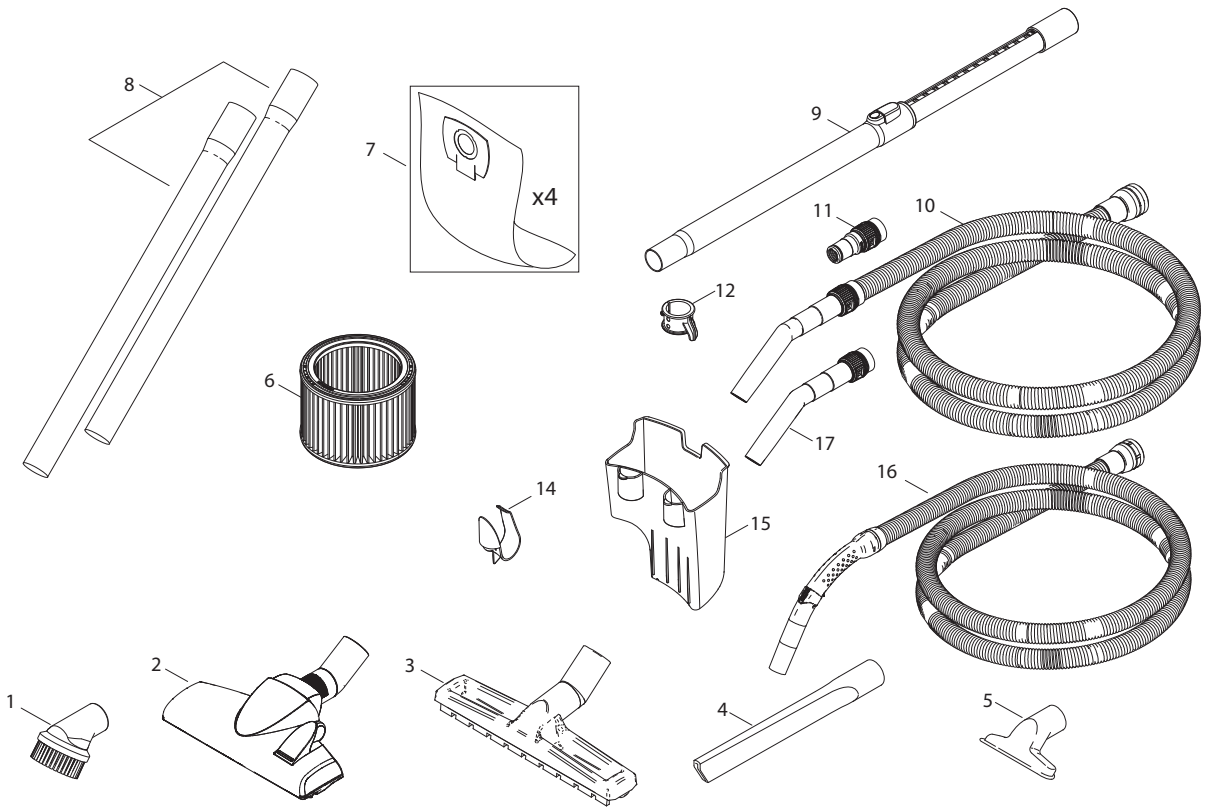
8
7
x4
9
11
10
12
6
17
14
16
15
2
3
1
4
5

No.	Part No.	Qty.	Description	Part Note
0	107412600	1	BOX AERO 26 X10	
0	107412602	1	BOX AERO 31 10X	
1	107407312	1	BRUSH NOZZLE D32	
1	302002509	1	SUCTION BRUSH D36 BLACK	
2	302002365	1	COMBI NOZZLE Ø36X260MM	
3	107402706	1	FLOOR NOZZLE D36x300MM W/D KIT	
3	107407310	1	FLOOR NOZZLE D32 RUBBER STRIP	
3	107407311	1	FLOOR NOZZLE D32 BRUSH	
4	107407334	1	CREVICE NOZZLE D32	
4	29541	1	CREVICE NOZZLE D36X200	
5	14295	1	UNIVERSAL NOZZLE D36X115	
6	302000490	1	FILTER ELEMENT Ø185X140 PET M-CLASS	
7	302002404	1	FILTER BAG AERO 4 PCS	
8	107400032	1	EXTENSION TUBE D36 2X500MM ALU	
8	302000529	1	EXTENSION TUBE D36 2X505MM ST/CR	
8	40696	1	EXTENSION TUBE D36 2X515MM PLASTIC	
9	107402654	1	TELESCOPIC TUBE D36 575-930MM CR-ST	
9	107402705	1	TELESCOPIC TUBE PLAST.-KIT	
10	107409976	1	UNIV HOSE WITH HAND TUBE D32X3500 CPL.	
11	107409977	1	TOOL ADAPTER WITH SUCTION REGULATION D32	[1]
12	107410888	1	TUBEHOLDER KIT 37MM	
12	107409979	1	TUBE HOLDER KIT D36	
14	107409982	1	HOSE/CABLE HOOK. AERO 26/31	
15	107409980	1	TOOL BOX. AERO 26/31	
16	107406115	1	SUCTION HOSE D32X3500 CPL.	[1]
16	107405599	1	SUCTION HOSE D32X2500 CPL.	[1]
16	107418980	1	UNIV HOSE KIT D32X3500 W. TOOL ADAPTER	[2]
16	107407308	1	HOSE D32 1.9M CPL	
17	107413340	1	BENT END - ASSY - KIT	[1]

Part Notes:

[1] - TSB-LI-VACS-2017-01 - AERO+ATTIX hose

DE TSB-LI-VACS-2017-01 AERO+ATTIX Click-System Saugschlauch

[2] - Include hose and adapter 107409977

No.	Part No.	Qty.	Description	Part Note
1	107400032	1	EXTENSION TUBE D36 2X500MM ALU	
2	107400059	1	SOCKET 10A/250V CH	
3	107402654	1	TELESCOPIC TUBE D36 575-930MM CR-ST	
4	107402705	1	TELESCOPIC TUBE PLAST.-KIT	
5	107402706	1	FLOOR NOZZLE D36x300MM W/D KIT	
6	107404540	1	SWITCH 0-1 DOUBLE POLE SET	
7	107404542	1	ANTI-INTEFERENCE CAPACITOR SET	
8	107405599	1	SUCTION HOSE D32X2500 CPL.	
9	107405600	1	SUCTION HOSE D32x1900 CPL.	
10	107406115	1	SUCTION HOSE D32X3500 CPL.	
11	107407310	1	FLOOR NOZZLE D32 RUBBER STRIP	
12	107407311	1	FLOOR NOZZLE D32 BRUSH	
13	107409130	1	CLAMP	
14	107409131	1	RUBBER STRAP	
15	107409135	1	SWITCH 1-0-TOOL	
16	107409188	1	PCBA CHAMELEON 21 EA 230V	
17	107409160	1	MOTOR KIT 1000W 220-240V/50-60HZ	
19	107409162	1	MOTOR KIT 1000W 110-120V/50-60HZ	
20	107409163	1	UPPER MOTOR SEALING	
21	107409164	1	LOWER MNOTOR SEALING	
22	107409165	1	SEALING FILTER	
23	107409173	1	INLET GASKET	
24	107402646	1	FILTER SUPPORT CAGE ATTIX/AERO PP	
25	107409976	1	UNIV HOSE WITH HAND TUBE D32X3500 CPL.	
26	107409977	1	TOOL ADAPTER WITH SUCTION REGULATION D32	
27	107409978	1	TELESCOPIC TUBE HOLDER KIT D32	
28	107409979	1	TUBE HOLDER KIT D36	
29	140 6422 500	1	WHEELS LINK 50MM	
30	14295	1	UNIVERSAL NOZZLE D36X115	
31	29541	1	CREVICE NOZZLE D36X200	
32	302000490	1	FILTER ELEMENT Ø185X140 PET M-CLASSFILTER ELEMENT 185X140 PET M-CLASS	
33	302000529	1	EXTENSION TUBE D36 2X505MM ST/CR	
34	302000882	1	POWER CORD SJTW-AWG16/3X8	
35	302002052	1	PLUG SOCKET PLATE	
36	302002365	1	COMBI NOZZLE Ø36X260MM	
37	302002404	1	FILTER BAG AERO 4 PCSFILTER BAG AERO 4 PCS	
38	302002509	1	SUCTION BRUSH D36 BLACK	
39	302004034	1	SOCKET 16A/250V EU	
40	40696	1	EXTENSION TUBE D36 2X515MM PLASTIC	
41	60902	1	POWER CORD H05VV-F 2X0.75X5.7A	
42	61130	1	POWERCORD H05VV-F 3G1.5X5.7M C	
43	909100083	1	TORSION SPRING D0.9X18X45 INOX	

© 2016 - Nilfisk A/S