PARTS LIST

2017.09.28

TABLE OF CONTENTS

Overview 1
Accessories 3

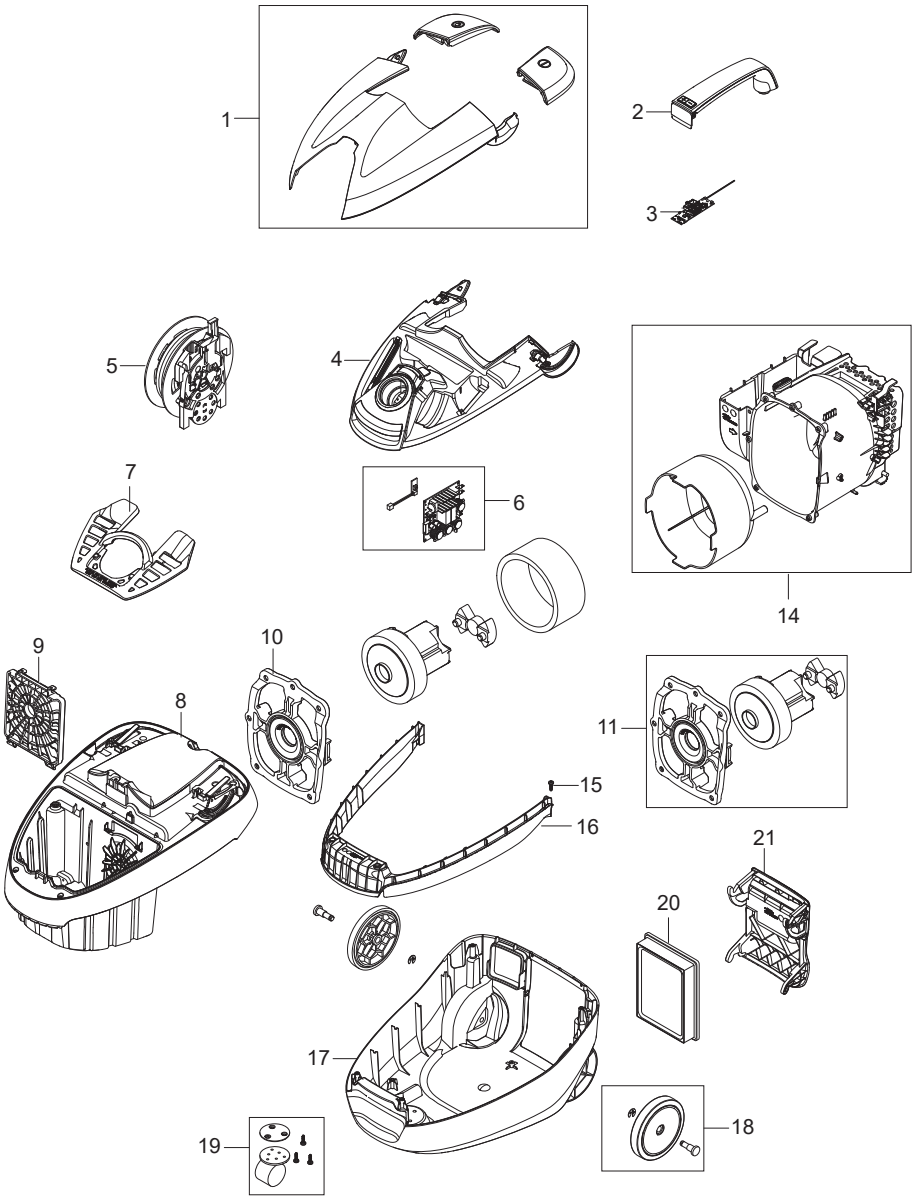
1
2
3
4
5
6
7
8
9
10
11
14
15
16
17
18
19
20
21

No.	Part No.	Qty.	Description	Part Note
0	107415438	1	20PCS BOXES SELECT	
1	107414019	1	ACCESSORY LID - GREEN	
1	107414020	1	ACCESSORY LID - WHITE	
1	107414027	1	ACCESSORY LID - BLACK SOLID	
2	107414049	1	CARRYING HANDLE - SELECT CLASSIC	
3	107414051	1	PCBA FOR CARRYING HANDLE-SELECT CLASSIC	
4	107416357	1		
4	107414010	1	DUST BAG COVER CPL - GREEN CLASSIC	
4	107414011	1	DUST BAG COVER CPL - WHITE CLASSIC	
5	128350226	1	CABLE REWINDER 8M UK	[1]
5	128350227	1	CABLE REWINDER 8M AUS/NZ	
5	128350228	1	CABLE REWINDER 8M EU	
6	107414054	1	MOTOR PCBA - SELECT CLASSIC	
7	107414056	1	DUST BAG HOLDER	
8	107414028	1	MAIN BODY - GREEN	
8	107414029	1	MAIN BODY - WHITE	
8	107414036	1	MAIN BODY - BLACK SOLID	
9	107414057	1	PRE-FILTER HOLDER	
10	107414059	1	INLET GASKET	
11	128350041	1	800W MOTOR KIT INCL.DAMPER AND GASKET	
13	107410041	1	SOUND DAMPENING FELT F.ELITE	
14	107414058	1	MOTOR HOUSING	
15	140 9214 040	1	SCREW PTK TORX 40X14 MM FZB	
16	107414067	1	EXHAUST COVER	
17	107414047	1	BOTTOM BASE SELECT	
18	107414048	2	1PC REAR WHEEL SELECT	
19	147 1040 500	1	FRONT WHEEL KIT POWER/EXTREME.	
20	147 1250 500	1	HEPA FILTER H13	
20	107409854	1	HEPA FILTER H14 CPL	
21	107414046	1	HEPA DOOR	

Part Notes:

[1] - NEVER LAUNCHED

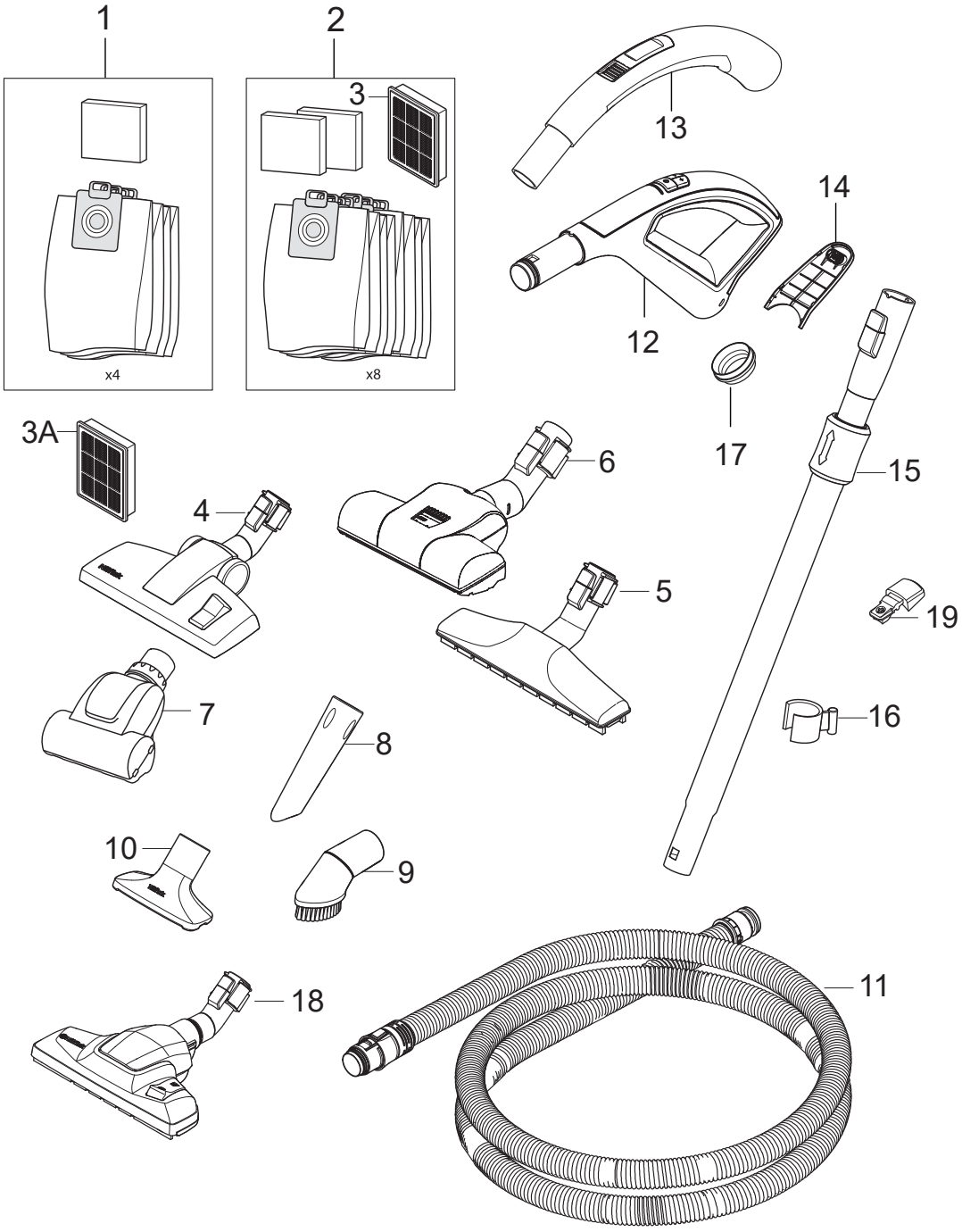
1
x4
2
x8
3
13
14
12
17
3A
6
15
4
5
19
7
16
8
10
9
18
11

No.	Part No.	Qty.	Description	Part Note
1	107407639	1	NILFISK SELECT DUST BAGS - 4PCS	
2	107414060	1	Select starter kit	
3	147 1250 500	1	HEPA FILTER H13	
3A	107409854	1	HEPA FILTER H14 CPL	
4	107413006	1	C Nozzle Eco Bravo Elite	
5	107409852	1	NOZZLE HARDFLOOR 32MM BLACK	
6	107409853	1	TURBO NOZZLE 32MM BLACK 280MM	
7	107414061	1	Mini turbo nozzle	
8	107409855	1	CREVICE NOZZLE 32MM BLACK TPE	
9	107409856	1	BRUSH NOZZLE 32MM BLACK PP	
10	107409857	1	UPHOLSTRY NOZZLE 32MM BLACK PP	
11	107416571	1	SELECT CONICAL HOSE 32-38 MM	
12	107410295	1	NILFISK ELITE BENT END	
13	107414062	1	BASIC BENT END	
14	107409105	1	BATTERY CAP FOR BENT END	
15	107409851	1	TELESCOPIC TUBE 32MM ALUMINIUM	
16	128350157	1	PARKING CLIP SHORT	
17	107416211	1	SEALING RING	
18	128389014	1	ACCESSORY NA38 COMBI NOZZLE W CLICK	
19	128389115	1		

© 2016 - Nilfisk A/S